PAINT SKID WELDMENT BLACK

ZONE	REV	DESCRIPTION	DATE	APPROVED
	C	BAND WAS 1-PC, (3) REQ	26APR02	
	D	BAND REVISED & REDRAWN	09APR09	

REVISIONS

ZONE	REV	DESCRIPTION	DATE	APPROVED
	A	REDRAWN	18SEP97	
	B	WAS BLUE	27FEB02	

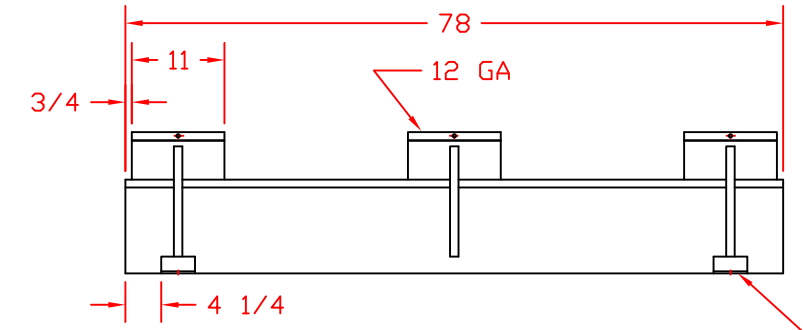

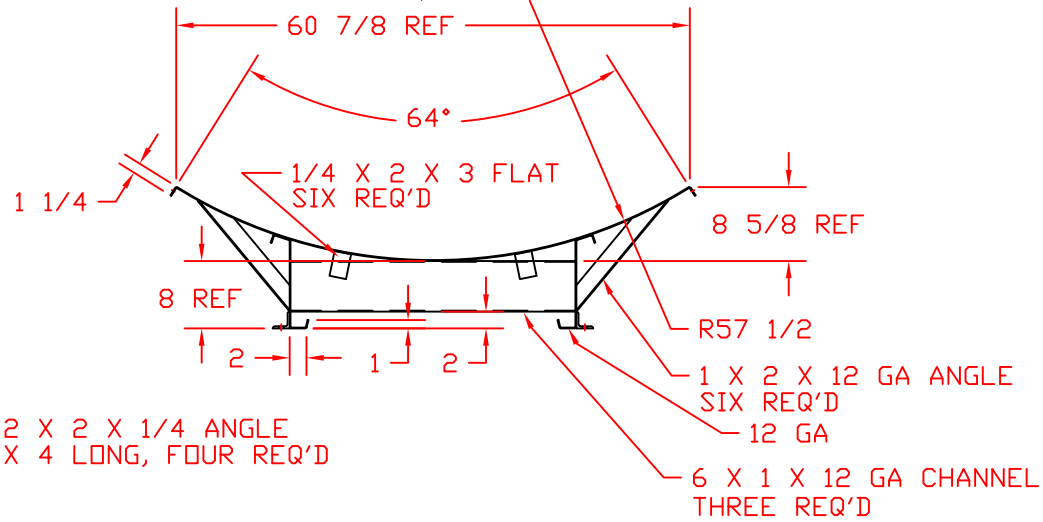

2 X 2 X 1/4 ANGLE
X 4 LONG, FOUR REQ'D

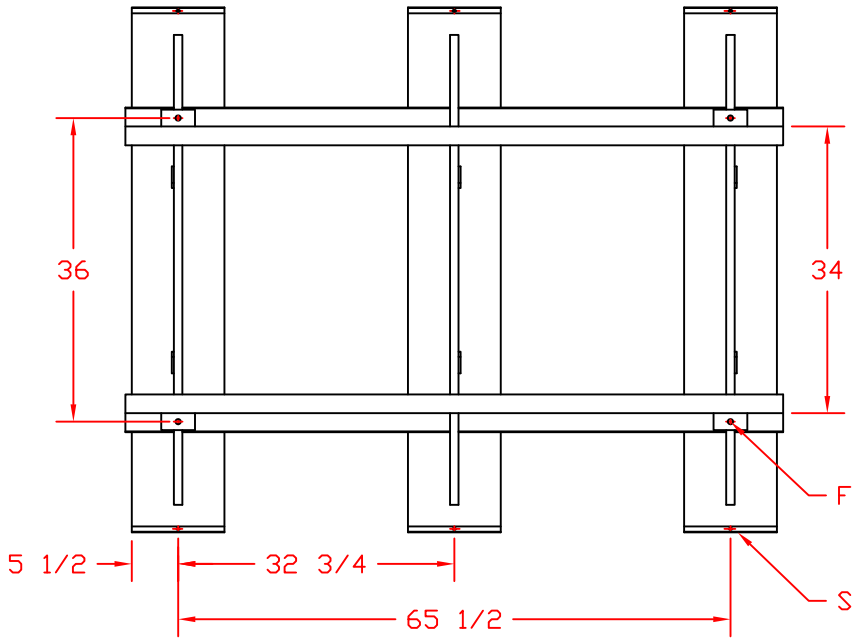

FOUR HOLES, 5/8 DIA

SIX HOLES, 7/16 DIA

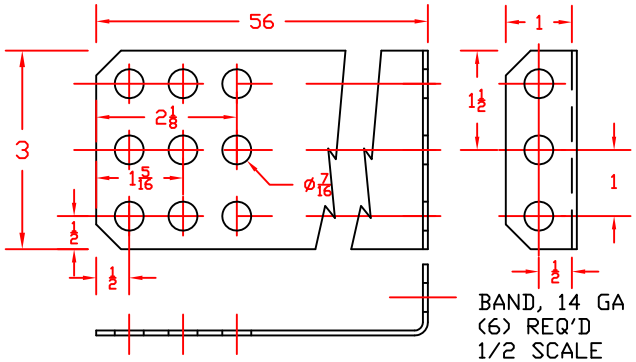

BAND, 14 GA GALV,
(6) REQ'D
1/2 SCALE

NORWESCO
ST. BONIFACIUS, MN

750 ELLIPTICAL SKID

JTP 18SEP97	SIZE B	FSCM NO.	DWG NO.	REV D
	SCALE 1/16			SHEET